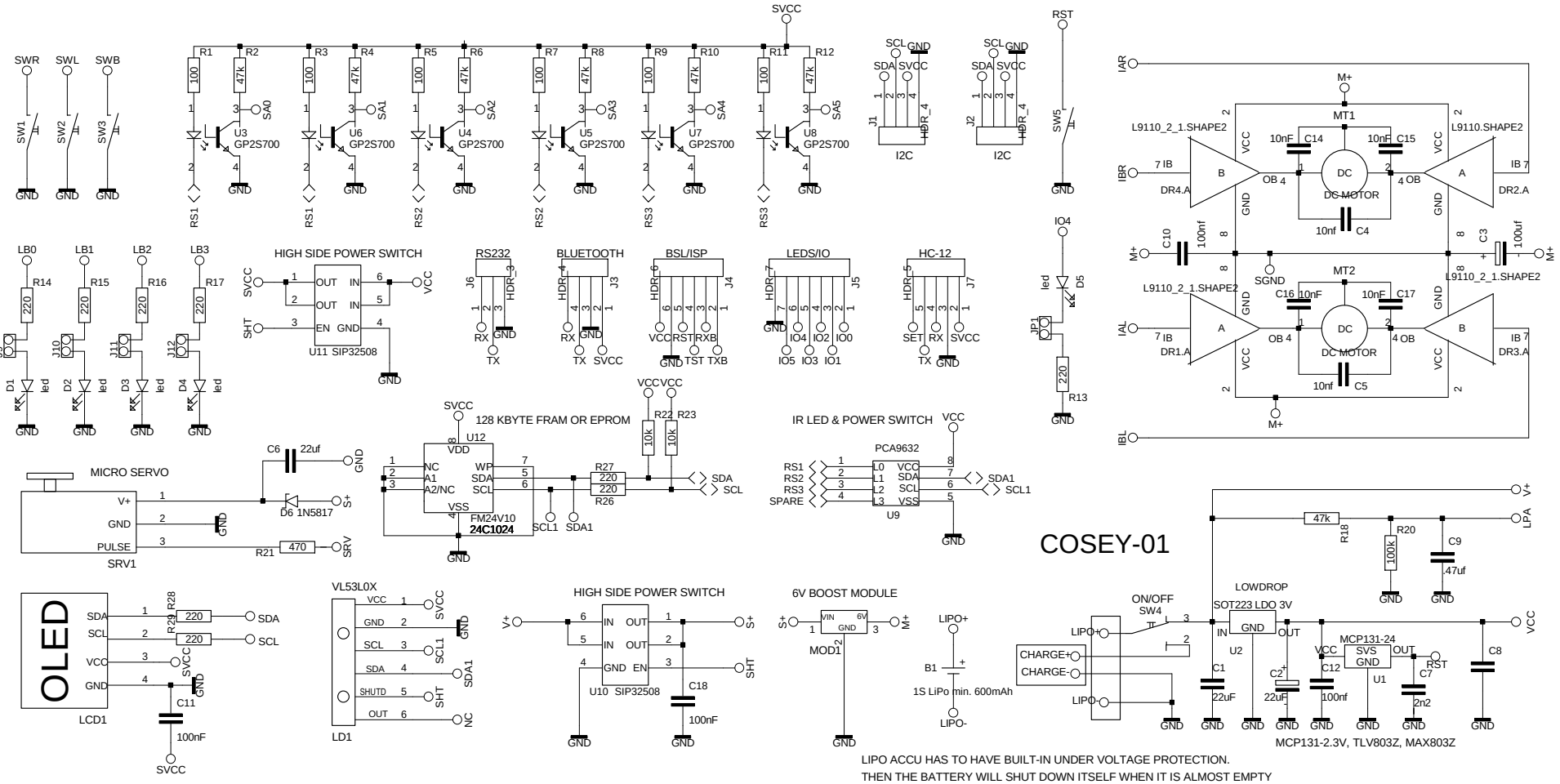
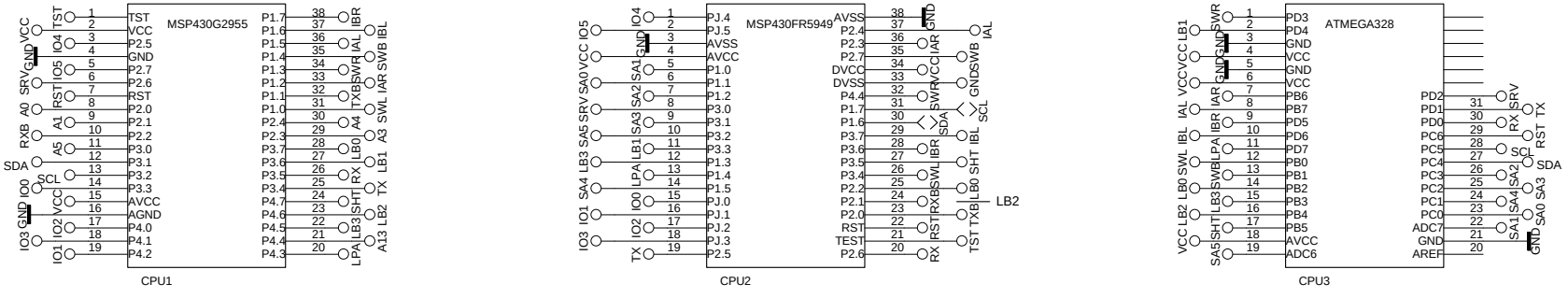
CPU UNITS FOR COSEY